Setting the Standard for Automation™

Increasing operational efficiencies and safety in sulphur plants, with UV and TDLAS analyzers

Michael Gaura

Senior Product Manager

Ametek Process Instruments

Standards

Certification

Education & Training

Publishing

Conferences & Exhibits

Personal Bio

- 20+ years of analytical experience
- Responsibilities
  - Field service engineer
  - Technical sales
  - Business development
  - Product management & marketing
- Industries
  - Environmental
  - Steel
  - Refining
  - Petrochemical
  - Pipeline

AMETEK®
PROCESS INSTRUMENTS

Three analyzer installations that can improve efficiency and safety

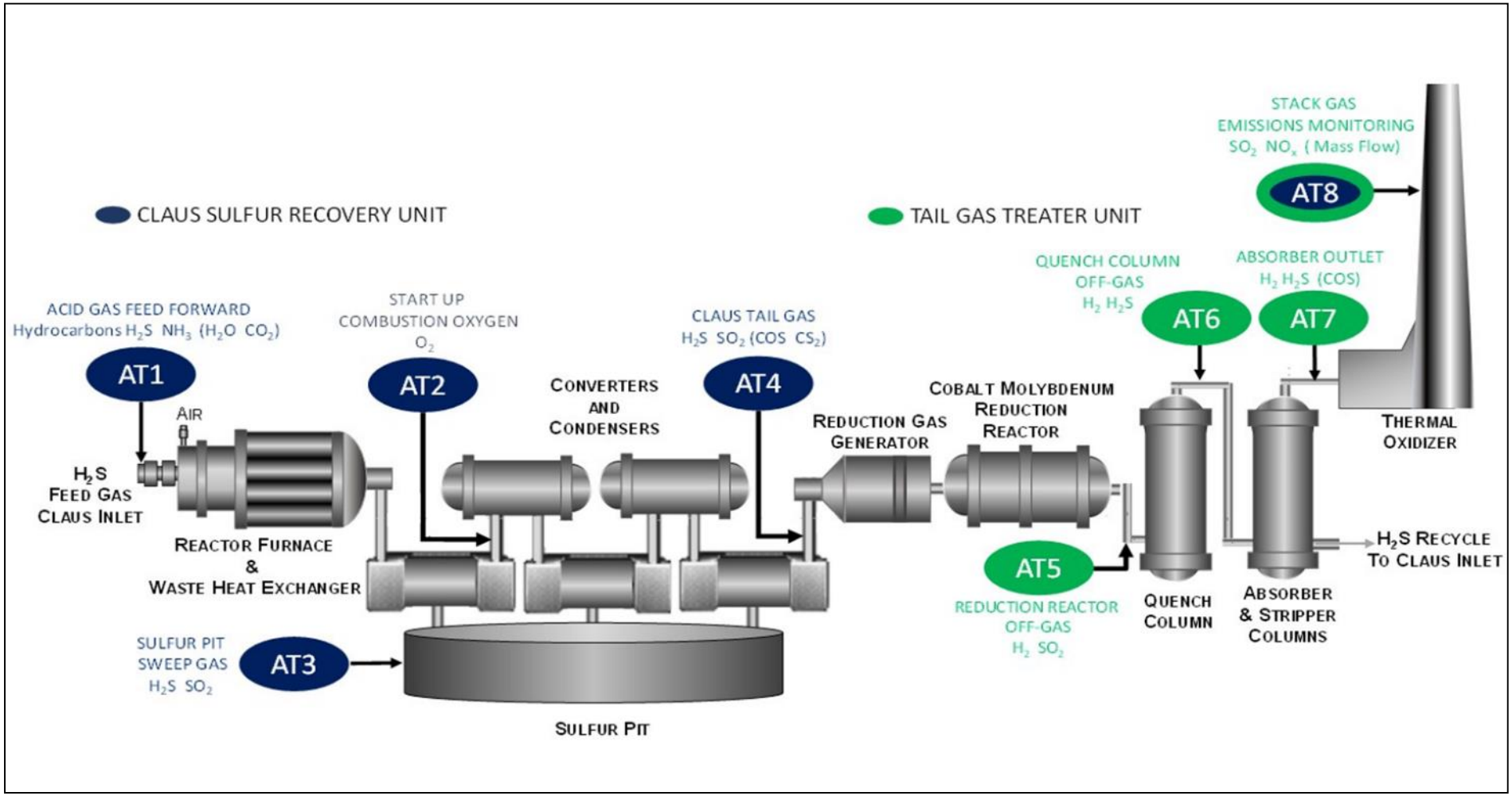

First:
Acid Gas Analysis / Feed Forward Control

- Efficiency improvements

Costs

Output
&
Profitability

Amine Process Flow Sheet

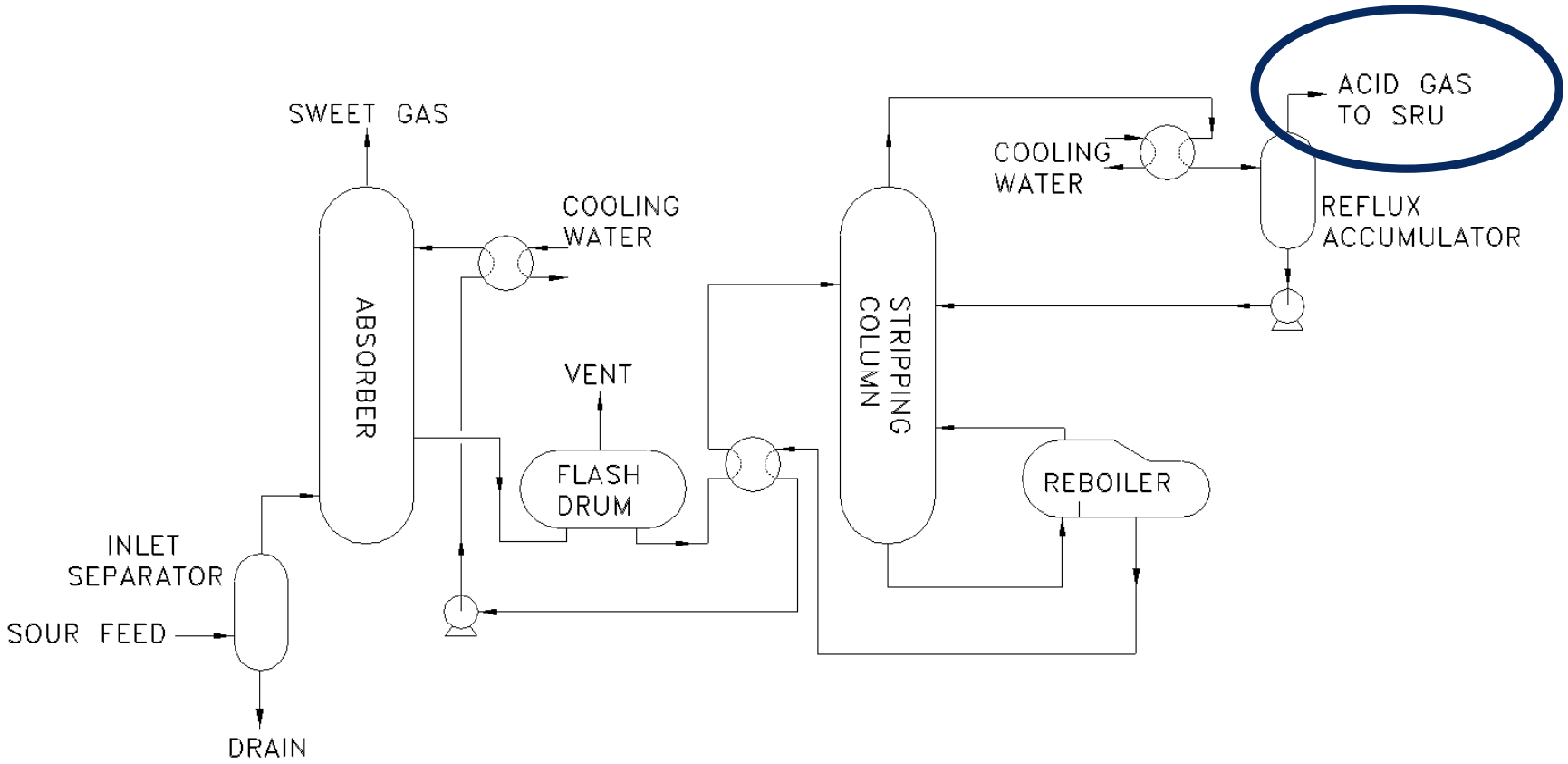

Measuring the key components

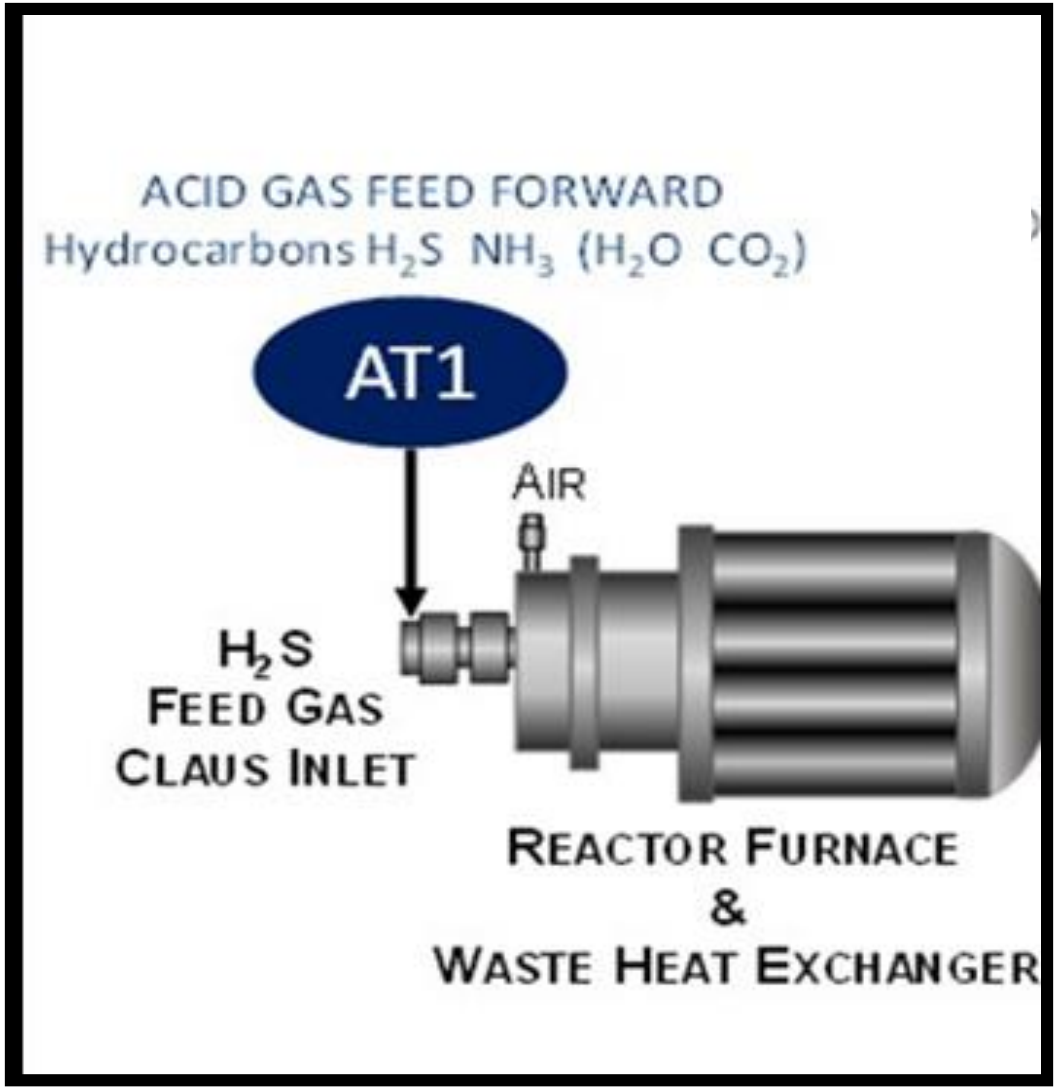

O_2 Required to Burn Hydrocarbons Compared to an Equal Amount of H_2S

Compound	Moles O_2 per Mole HC	Ratio of O_2 needed per mole HC compared to mole of H_2S
Methane	2	4
Ethane	3.5	7
Propane	5	10
Butane	6.5	13
Pentane	8	16
Hexane	9.5	19

Field Data / HC Process Upset

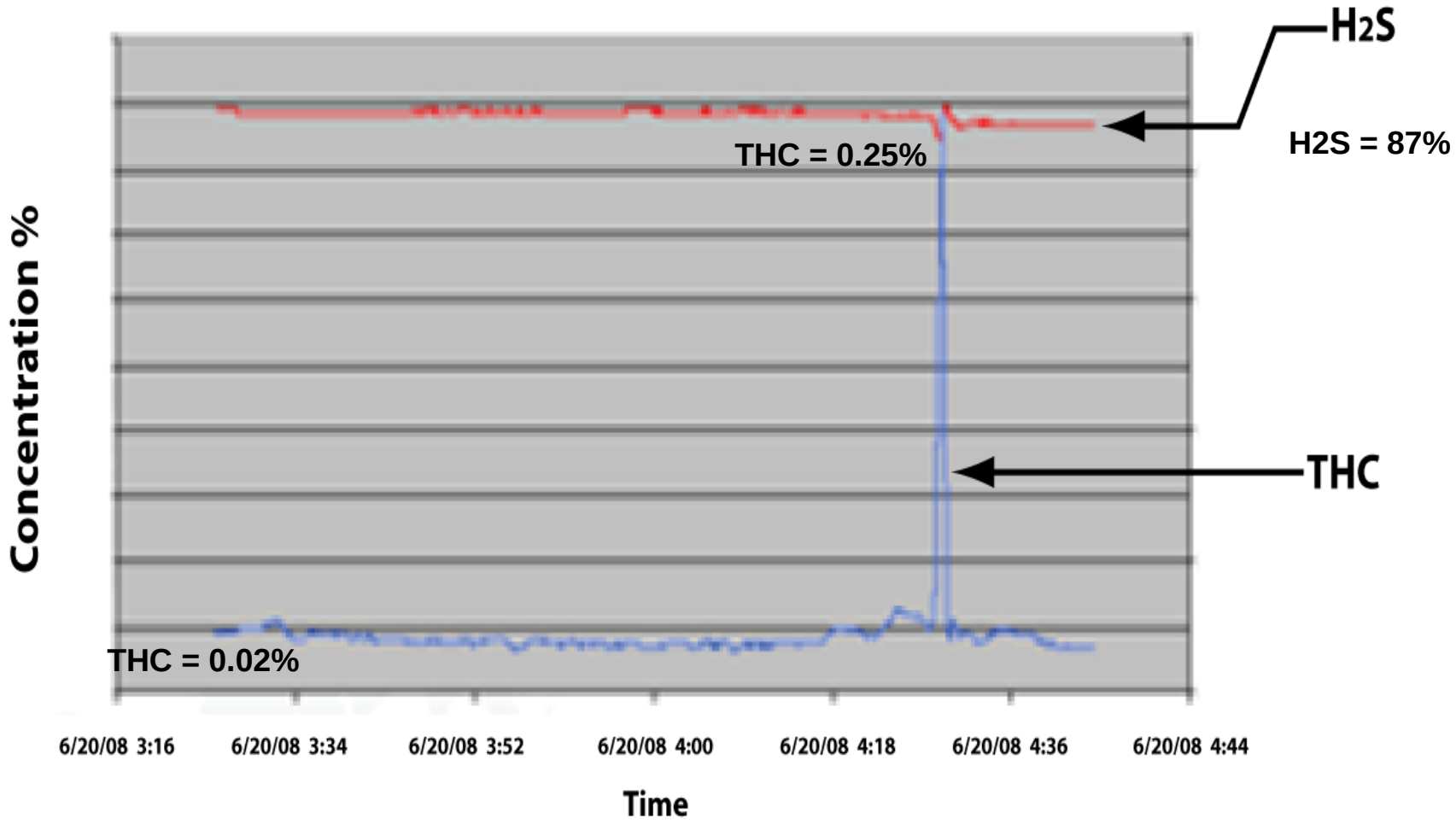

Acid Gas Analysis - Improved

- Benefits
  - Improved control
  - Fewer upsets
  - Mitigation of upsets
- Key considerations
  - Timely response
  - Minimize interferences
  - Proper probe and sample conditioning system

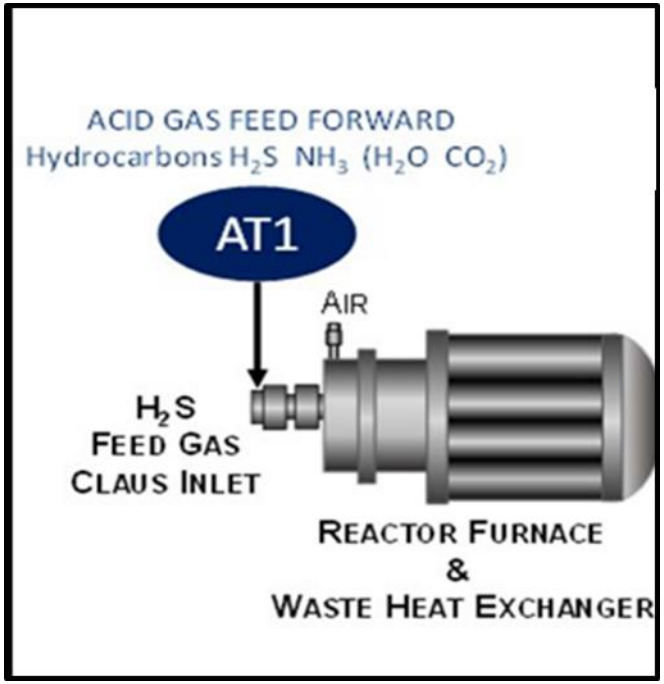

Better external to the analyzer

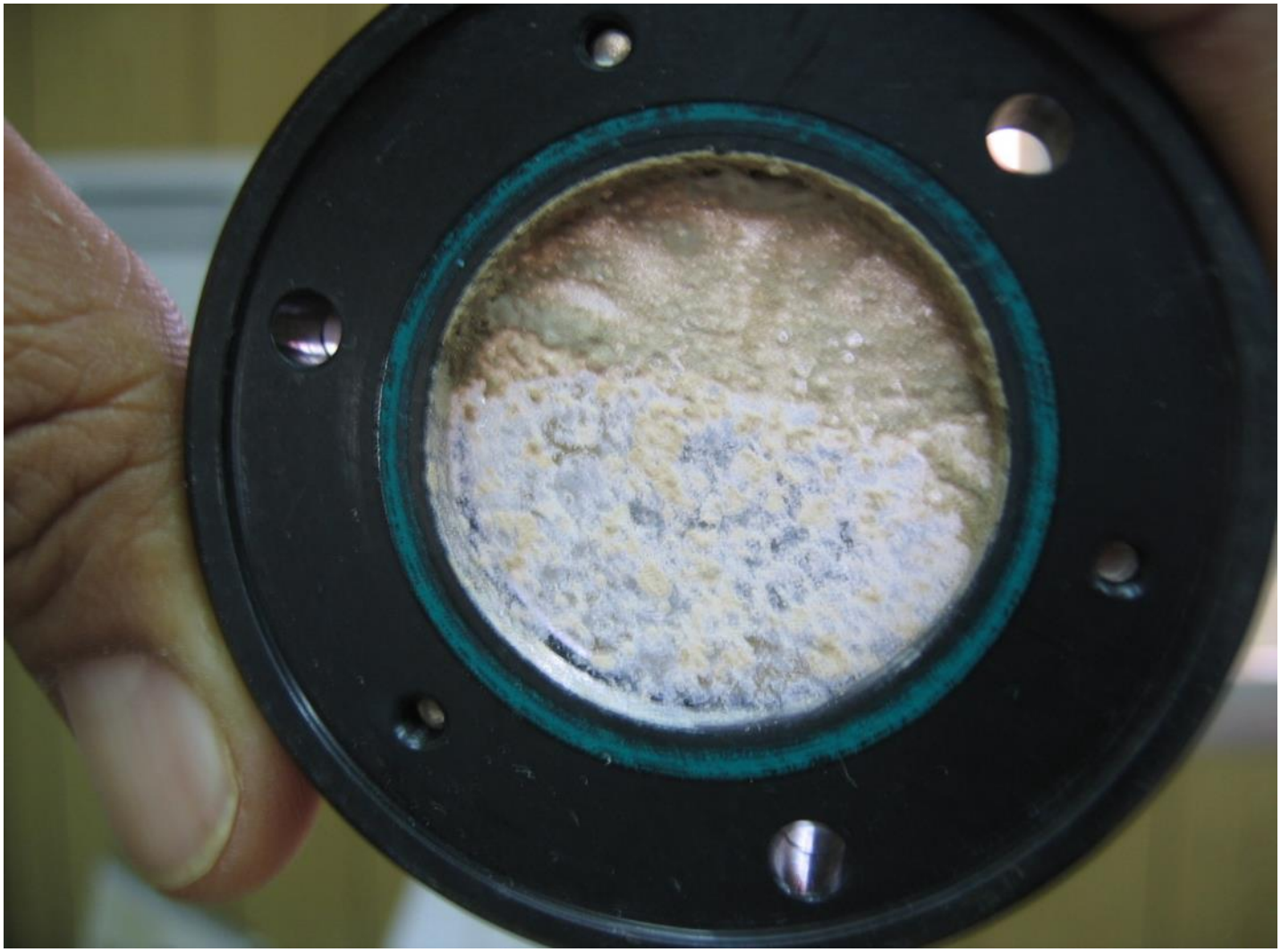

Second:
Continuously measure the O_2

- **Efficiency & Safety improvements**

Risks
&
Costs

Safety
&
Sulfur removal

Before (and After?) condensers

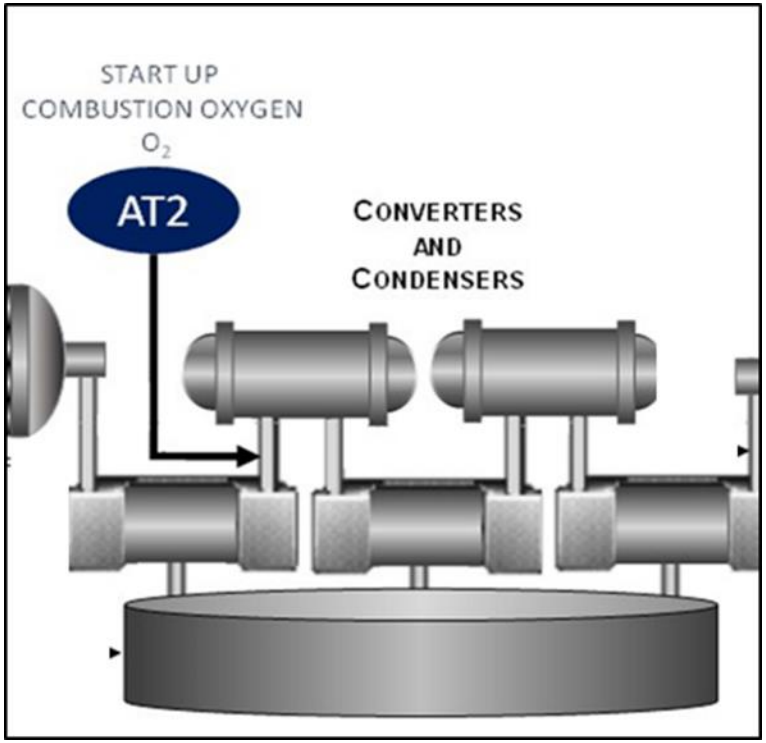

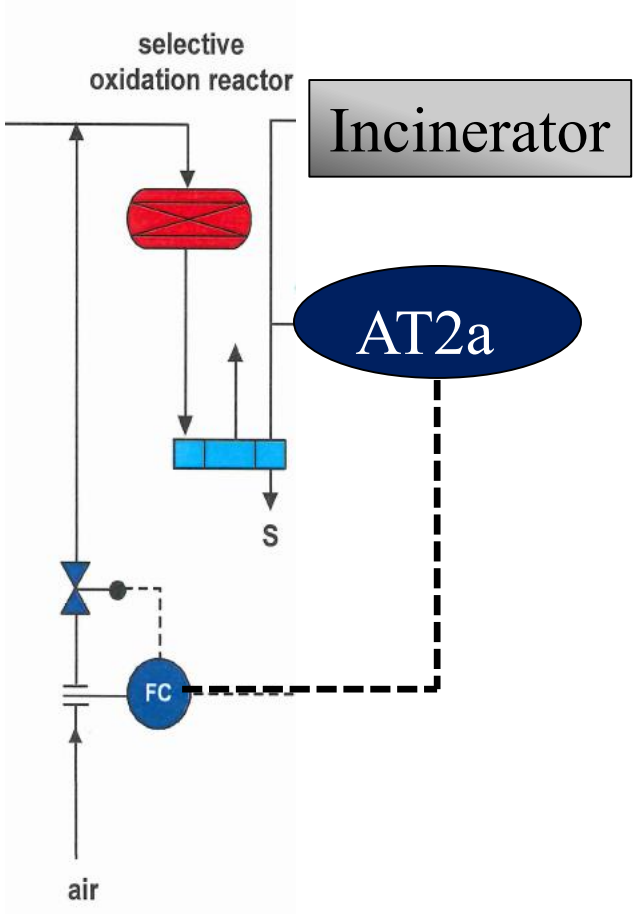

A TDLAS

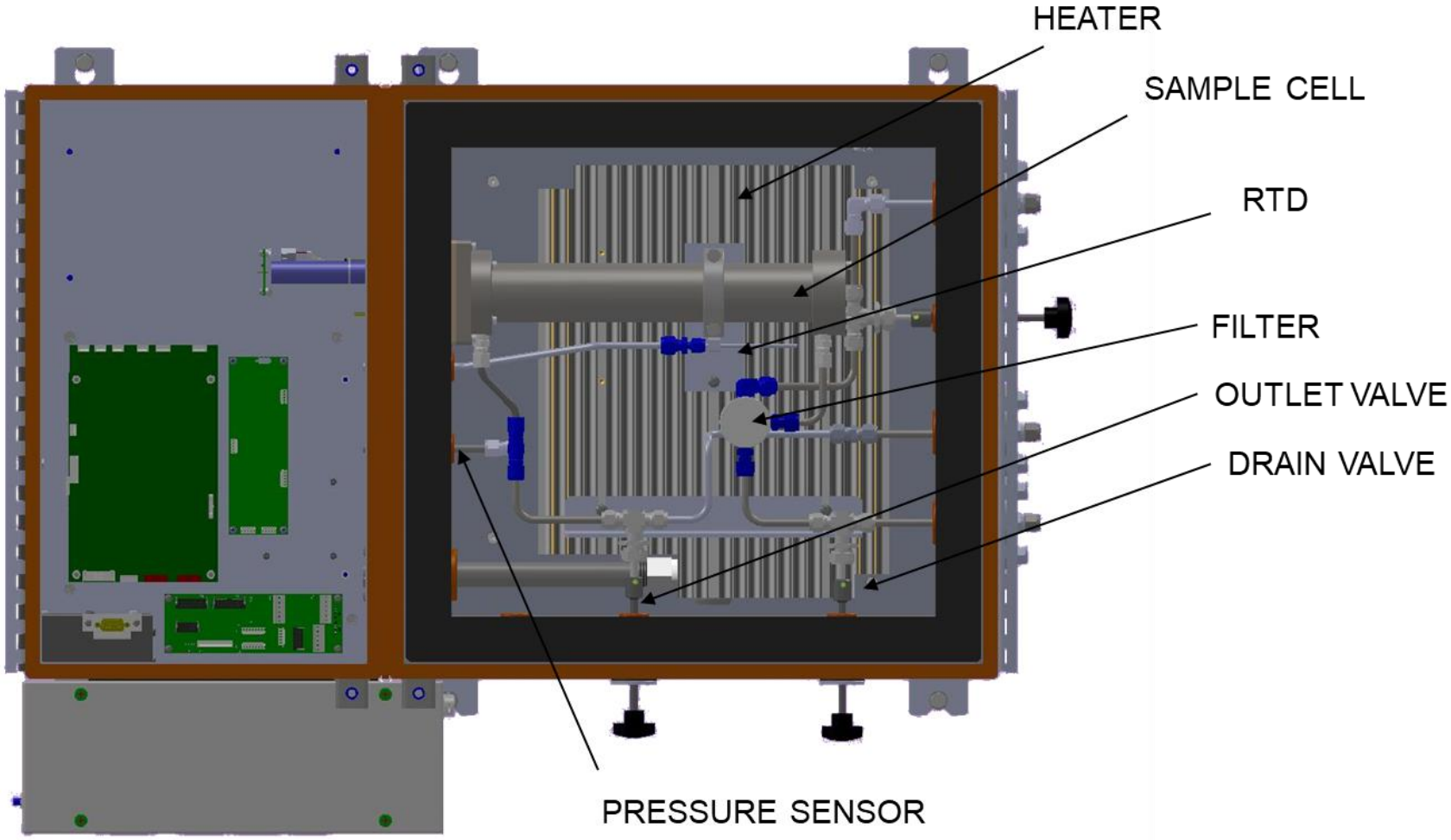
HEATER
SAMPLE CELL
RTD
FILTER
OUTLET VALVE
DRAIN VALVE
PRESSURE SENSOR

Laser and detector are isolated from the process gas

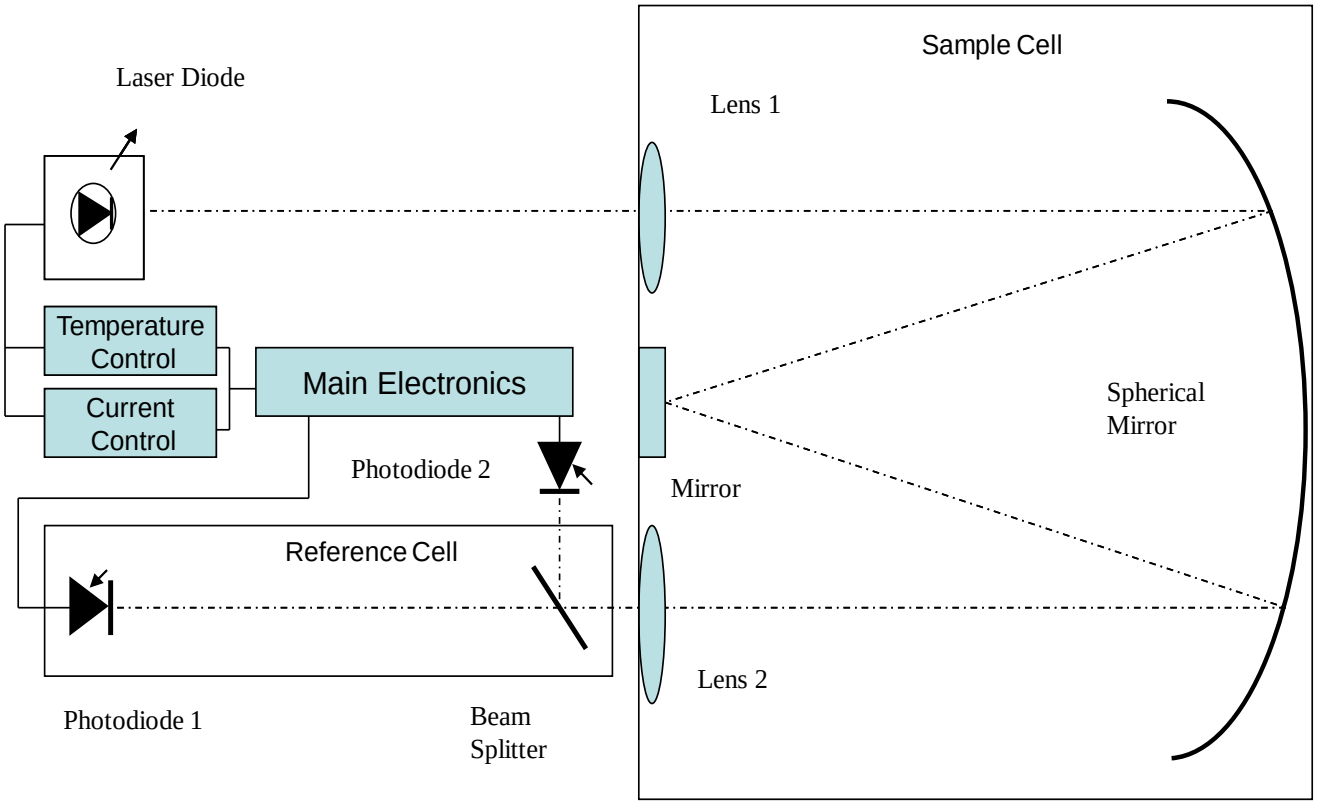

Remember the importance of the probe!

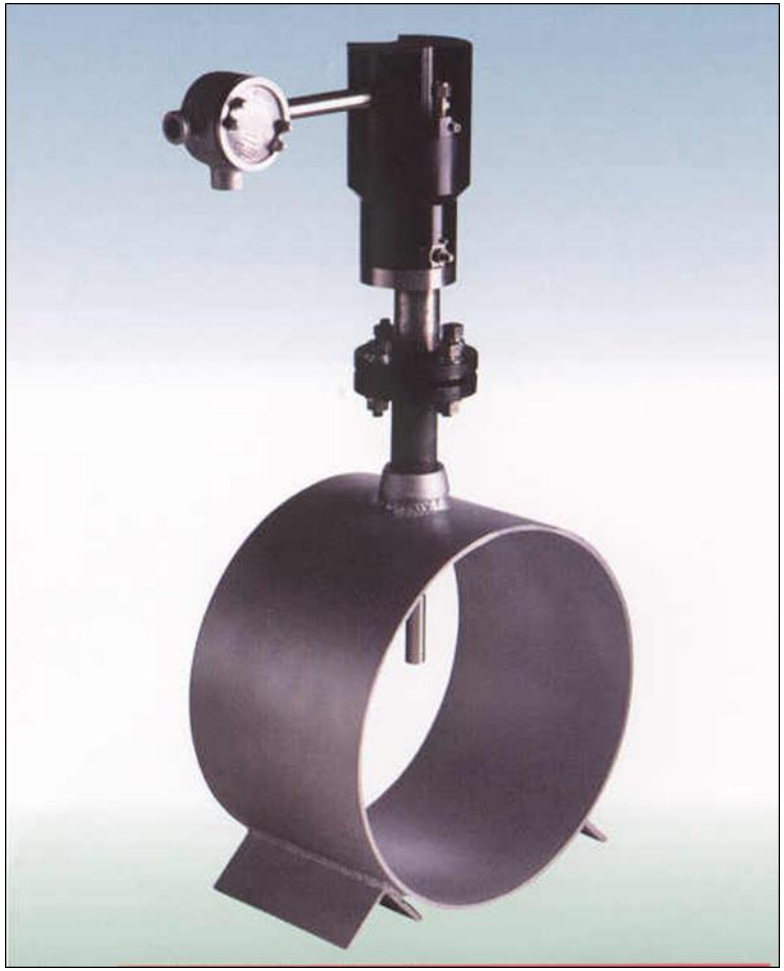

Oxygen measurements

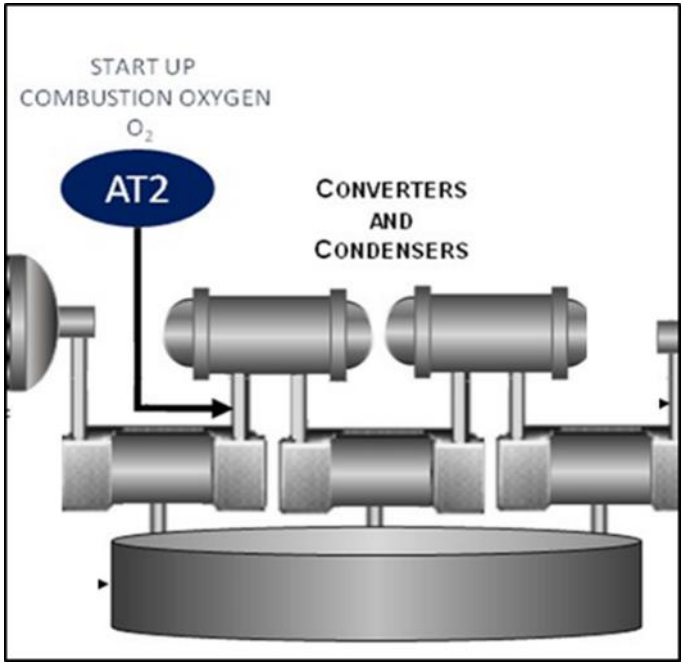

- Benefits
  - Remove the technician from the field
  - Reduce air input and catalyst use
- Key considerations
  - Timely response
  - Avoid equipment with high OpEx
  - Proper probe and sample conditioning system

Third:
Monitor your Sulphur storage

- **Efficiency & Safety improvements**

Risks

Plant uptime

Monitor H_2S and SO_2

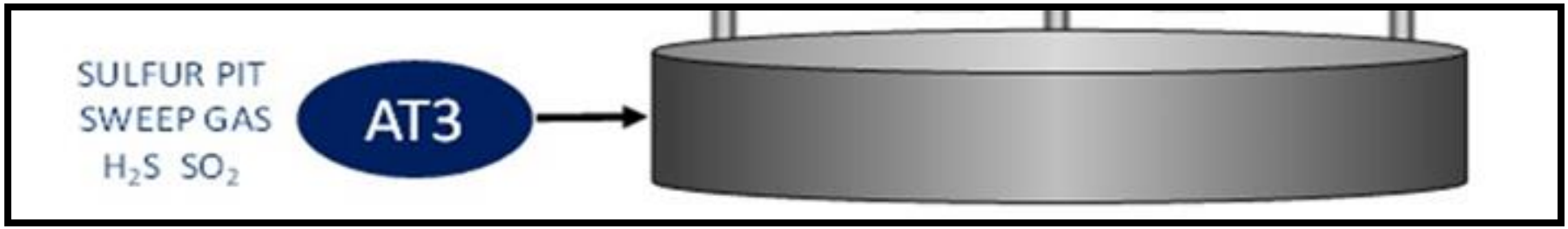

UV analyzers identify risk

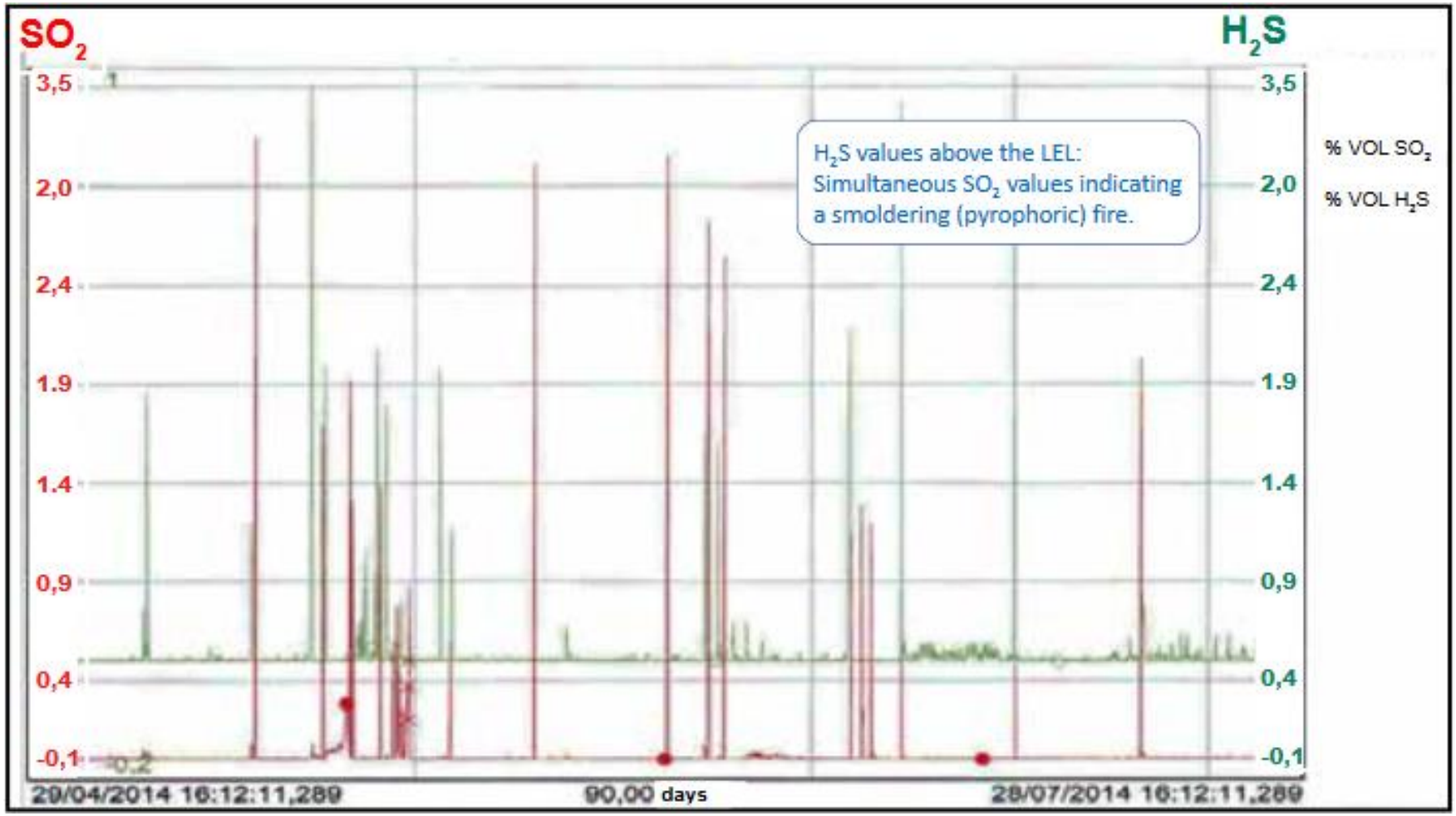

Sulphur storage pit measurements

- Benefits
  - Identify high H2S and SO2 levels as soon as possible
  - Reduce plant accidents
  - Reduce environmental events
  - Increase uptime
- Key considerations
  - Timely response
  - Avoid equipment with high OpEx
  - Proper probe selection

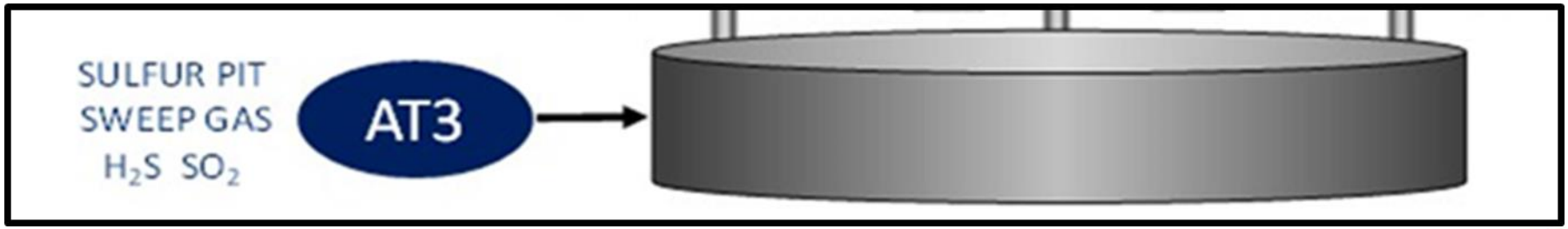

Three analyzer installations that can improve efficiency and safety

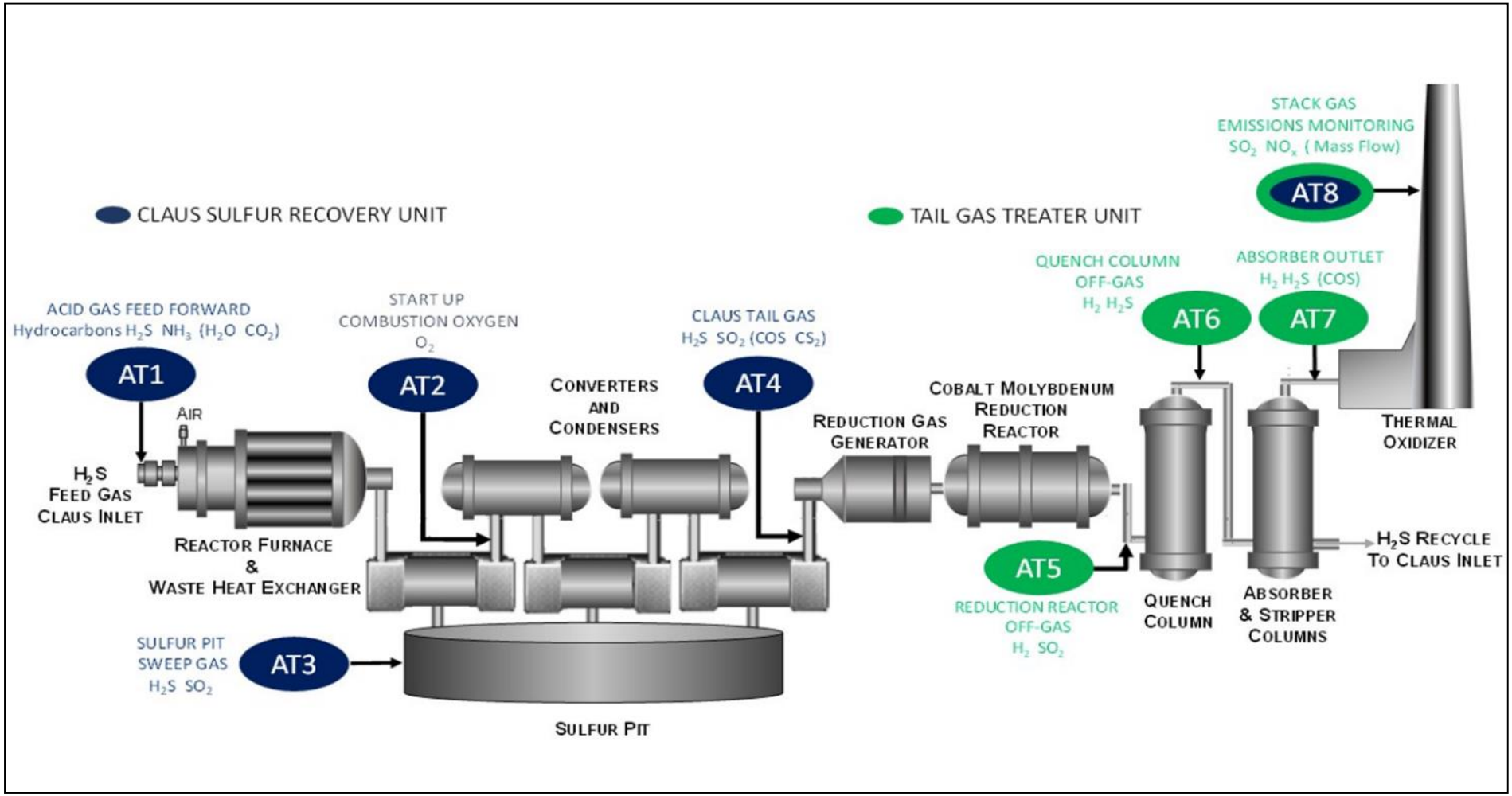

In closing